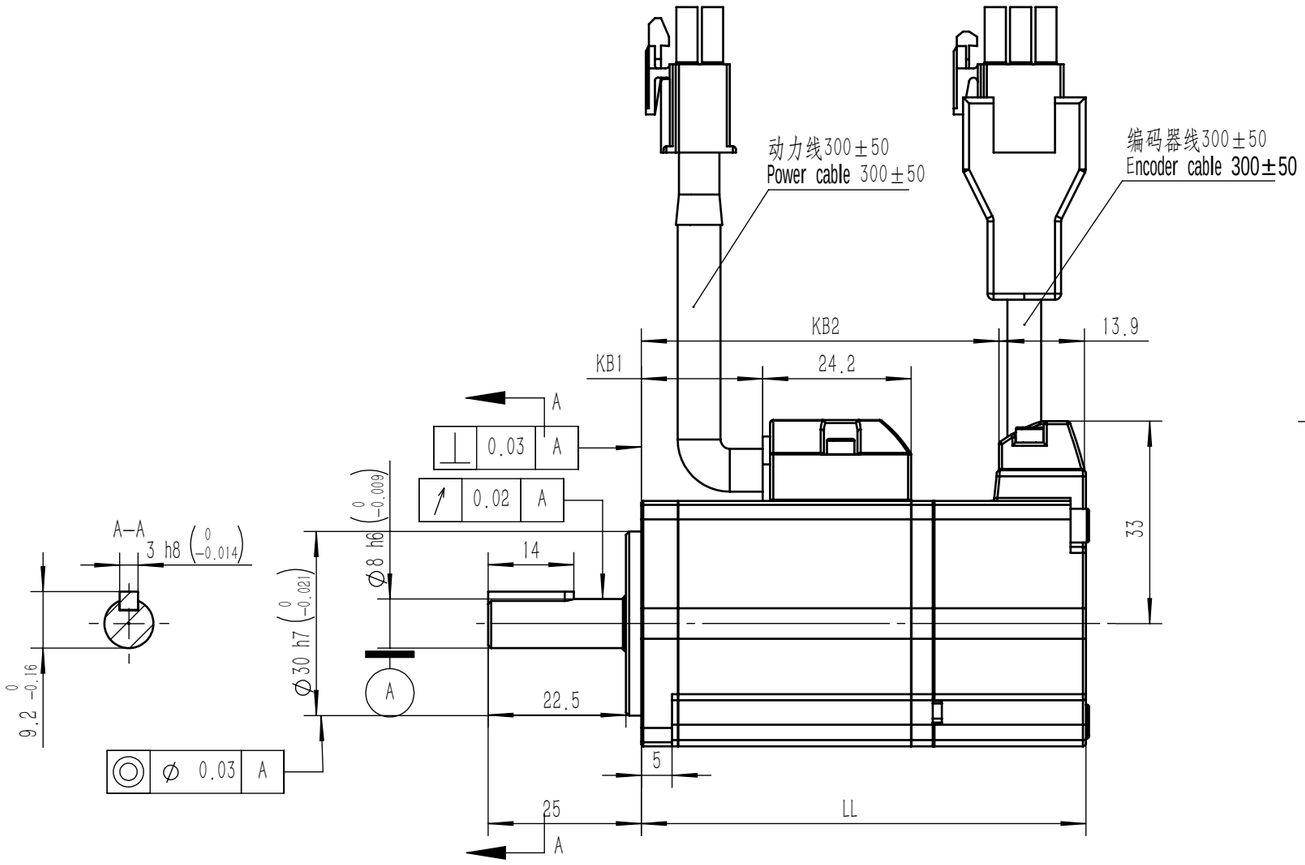


| 动力线插座引出线定义<br>Power cable connector specification | 颜色<br>Color | 引出线标识<br>Pin No. | 动力线插头<br>Power cable connector |
|---|---|---|---|
| U | 红 Red | 1 | 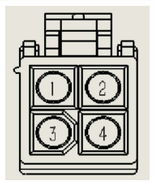 |
| V | 蓝 Blue | 2 | |
| W | 白 White | 3 | |
| PE | 黄/绿 Yellow/Green | 4 | |



| 编码器插座引出线定义<br>Encoder connector specification | | | | | |
|---|---|---|---|---|---|
| 引出线标识<br>Pin No. | 17位增量式编码器<br>17 bit incremental encoder | 20位增量式编码器<br>20 bit incremental encoder | 23位绝对值编码器<br>23 bit absolute encoder | 17位绝对值编码器<br>17 bit absolute encoder | 编码器插头<br>Encoder connector |
| 1 | S+ | S+ | S+ | S+ | 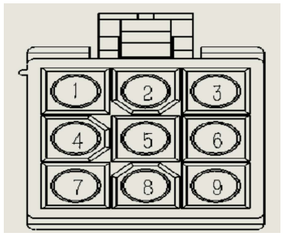 |
| 2 | S- | S- | S- | S- | |
| 3 | / | BAT+ | BAT+ | BAT+ | |
| 4 | / | MA+ | / | / | |
| 5 | / | MA- | / | / | |
| 6 | PG5V | PG5V | PG5V | PG5V | |
| 7 | PG0V | PG0V | PG0V | PG0V | |
| 8 | / | / | BAT- | BAT- | |
| 9 | FG | FG | FG | FG | |



| 电机型号<br>Motor model | 编码器类型<br>Encoder model | 电机本体尺寸 (mm)<br>External dimensions (mm) | | |
|---|---|---|---|---|
| | | LL | KB1 | KB2 |
| EM3A-A5AF/K/TA2 1/2 1/2 | F: 20位增量式编码器<br>F: 20 bit incremental encoder<br>K: 17位增量式编码器<br>K: 17 bit incremental encoder<br>T: 17位绝对值编码器<br>T: 17 bit absolute encoder | 72.5 | 19.8 | 58.3 |
| EM3A-A5ALA2 1/2 1/2 | L: 23位绝对值编码器<br>L: 23 bit absolute encoder | 62.5 | 19.8 | 48.3 |